Double Range Bottom Unloading Arm Electrically Heated, for Rail Tank Unloading - Model 2454-TRC

Operating Conditions

Design Pressure	1.0 Bar G
Test Pressure	1.5 Bar G
Design Temperature	-40°C / +200°C
Seal Material	PTFE

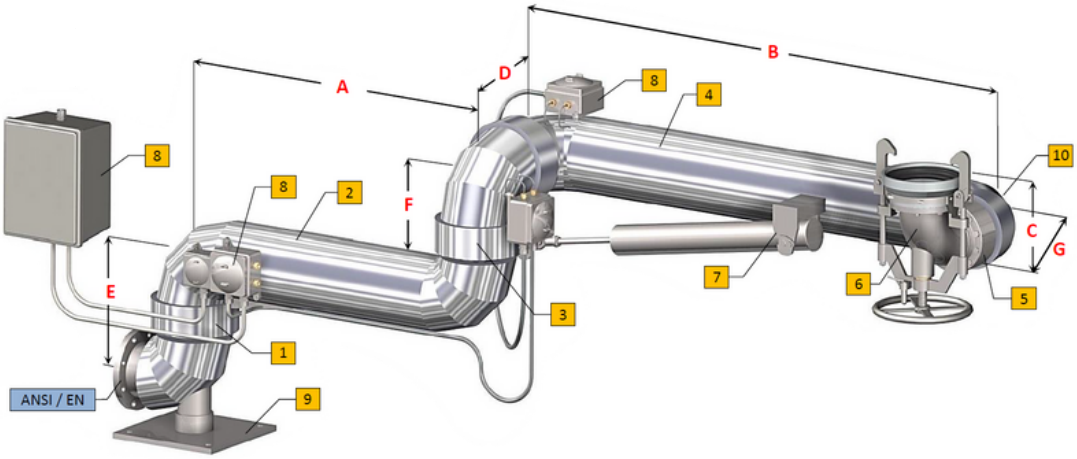

Standard Dimensions

Dn.	6"	8"
A	1000/1500	1000/1500
B	1500/2000	1500/2500
C	264	300
D	441	548
E	441	490
F	441	490
G	441	548
Weight	300	400

N.	Description	Dwg/Mod
1	Style 40 Base Swivel Joint	2834
2	Boom Assembly	-
3	Style 70 Double Swivel Joint	2834
4	Primary Arm	-
5	Style 40 Base Swivel Joint	2834
6	Coupler for Tankers	C-4871
7	Spring Balancing Cylinder	C-4879
8	EEx-d Box for Heating System	-
9	Base Support	-
10	Handle	-

Demonstration of operating area

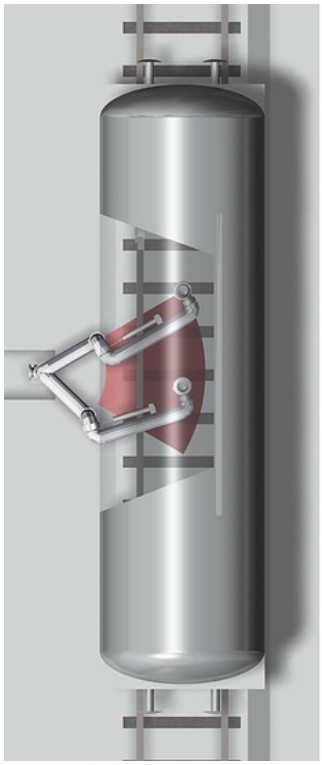

Options:

- Insulation up to the final arm
- Locking device arm in parking position
- Stand Post with pillow block
- NDT test (RT-PT-MT) available on request

Notes:

- Earthing continuity along the arm, according to ATEX directive